RHINO

2.2KW TQ4 HEATER 230V

OPERATING INSTRUCTIONS

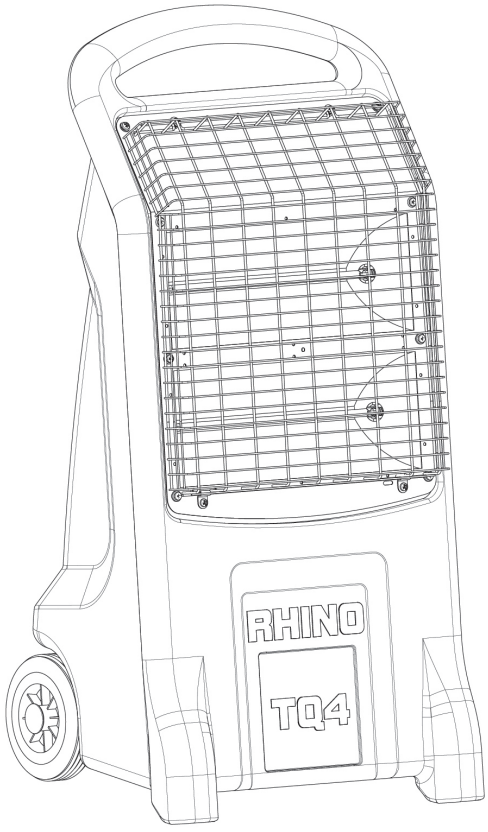

RHINO TQ4: 239964

Rhino designed and distributed by Tradesafe Products

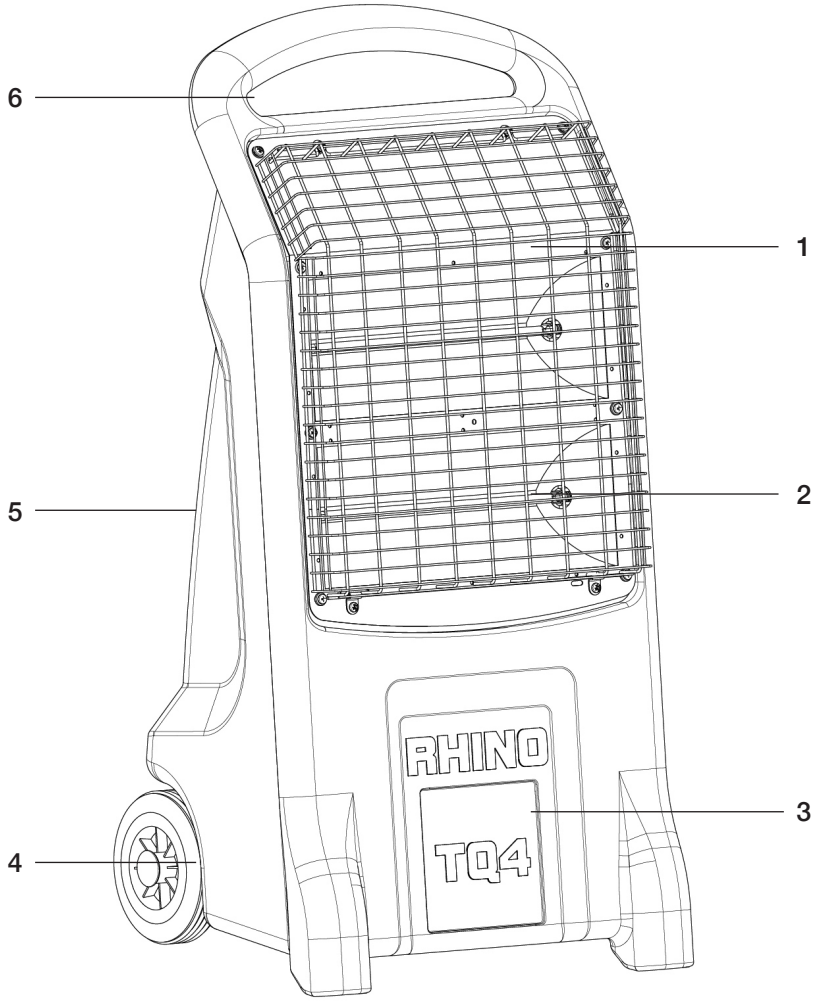
6
1
5
2
RHINO
3
TQ4
4

Fig. I



Fig. II

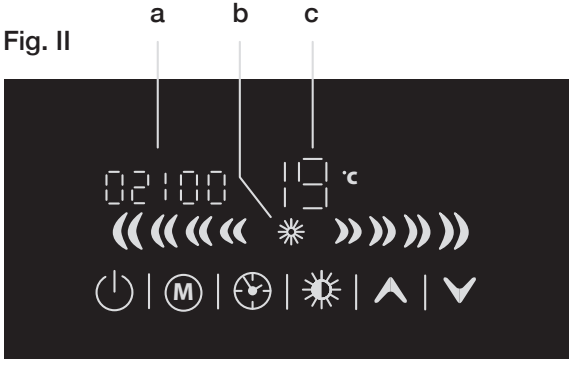

Introduction

Thank you for purchasing this Rhino product. This manual contains information necessary for safe and effective operation of this product. This product has unique features and, even if you are familiar with similar products, it is necessary to read this manual carefully to ensure you fully understand the instructions. Ensure all users of the product read and fully understand this manual. Keep these instructions with the product for future reference.

Description of Symbols

The rating plate on your tool may show symbols. These represent important information about the product or instructions on its use.



Wear hearing protection
Wear eye protection
Wear breathing protection
Wear head protection



Wear hand protection



WARNING – To reduce the risk of injury, user must read instruction manual



Class I construction (protective earth)



Caution!



Fragile



Conforms to relevant legislation and safety standards.



Environmental Protection
Waste electrical products should not be disposed of with household waste. Please recycle where facilities exist. Check with your local authority or retailer for recycling advice.

Technical Abbreviations key

V	Volts
~	Alternating current
Hz	Hertz
kW	Kilowatts
A	Amps

Specifications

Voltage:. . . . . 230V~, 50Hz
Infrared Halogen Lamp (RHN-TQ3-18):Wattage - 2 x 1.1kW (+/-5%)
. . . . . Overall Length - 349mm
. . . . . Average Life – 1000hrs
Power Cord Length: 1.9m
Plug: . . . . . 13A UK 3 pin (BS 1363/A) with 13A fuse (BS 1362)
Power Cord: . . . . . VDE black 3G 1.5mm2 H07 RN-F
Dimensions (LxWxH): . . . . . .500 x 460 x 1000mm
Weight: 12.0kg
Operating Temperature: . . . . . -20°C to +40°C

General Appliance Safety Warnings

⚠ **WARNING:** This appliance can be used by children aged from 8 years and above and persons with reduced physical, sensory or mental capabilities or lack of experience and knowledge if they have been given supervision or instruction concerning use of the appliance in a safe way and understand the hazards involved.

⚠ **WARNING: Read all safety warnings, instructions, illustrations and specifications provided with this appliance.** *Failure to follow all instructions listed below may result in electric shock, fire and/or serious injury.*

Save all warnings and instructions for future reference.

The term "appliance" in the warnings refers to your mains-operated (corded) appliance or battery-operated (cordless) appliance.

a) Keep appliance away from heat, sharp objects, oil and other hazards.
b) DO NOT place the cord under carpets or other textile coverings such as clothes or dust sheets.
c) DO NOT place the cord in areas where it may pose a trip hazard.
d) DO NOT use the appliance if the cable or plug is damaged.
e) DO NOT use the appliance if the switch does not turn it ON and OFF. *Any appliance that cannot be controlled with the switch is dangerous and must be repaired.*
f) Ensure appliance is switched OFF before connecting to mains power supply.

g) Disconnect the plug from the source and/or remove the battery pack, if detachable, from the appliance before making any adjustments, changing accessories, or storing appliances. *Such preventive safety measures reduce the risk of starting the appliance accidentally.*

h) Store idle appliances out of the reach of children and DO NOT allow persons unfamiliar with the appliance or these instructions to operate the appliance. *Appliances are dangerous in the hands of untrained users.*

i) Maintain appliances and accessories. Check for misalignment or binding of moving parts, breakage of parts and any other condition that may affect the appliance's operation. If damaged, have the appliance repaired before use. *Many accidents are caused by poorly maintained appliances.*

j) Children must not play with the appliance. *Cleaning and user maintenance must not be made by children without supervision.*

k) DO NOT use appliance in wet or damp conditions, such as in bathrooms.

l) DO NOT touch appliance switch, controls, cabling, plug or connection with wet hands.

m) When moving from one place to another, consider the weight of the machine.

1) Electrical safety

a) Appliance plugs must match the outlet. Never modify the plug in any way. DO NOT use any adapter plugs with earthed (grounded) appliances. *Unmodified plugs and matching outlets will reduce risk of electric shock.*

b) DO NOT abuse the cord. Never use the cord for carrying, pulling or unplugging the appliance. Keep cord away from heat, oil, sharp edges or moving parts. *Damaged or entangled cords increase the risk of electric shock.*

c) When used in Australia or New Zealand, it is recommended that this appliance is ALWAYS supplied via Residual Current Device (RCD) with a rated residual current of 30mA or less.

d) Use proper extension cord. *Make sure your extension cord is in good condition. When using an extension cord, be sure to use one heavy enough to carry the current your product will draw. An undersized cord will cause a drop in line voltage resulting in loss of power and overheating.*

e) Always check that the power supply corresponds to the voltage on the rating plate. *The electric motor is designed for a single voltage only.*

f) If the supply cord is damaged, it must be replaced by the manufacturer, its service agent or similarly qualified persons in order to avoid a hazard.

2) Service

a) Have your appliance serviced by a qualified repair person using only identical replacement parts. This will ensure that the safety of the appliance is maintained.

Additional Safety Warnings for Heaters

⚠ **WARNING:** Children of less than 3 years should be kept away unless continuously supervised. Children aged from 3 years and less than 8 years shall only switch ON/OFF the appliance provided that it has been placed or installed in its intended normal operating position and they have been given supervision or instruction concerning use of the appliance in a safe way and understand the hazards involved. Children aged from 3 years and less than 8 years shall not plug in, regulate and clean the appliance or perform user maintenance.

⚠ **WARNING:** Some parts of this product can become very hot and cause burns. Particular attention has to be given where children and vulnerable people are present.

a) Ensure that heater is positioned on a firm, dry, horizontal surface.

b) Keep away from flammable objects/materials/surfaces. This product gets very hot during use. Mount or use in a location where accidental contact (particularly by children) is unlikely.

c) Ensure ON/OFF switches are set to OFF before connecting power cord to power supply.

d) DO NOT move heater whilst switched on.

e) DO NOT move heater by pulling on power cord.

f) DO NOT remove plug from mains supply by pulling on power cord.

g) Always switch off heater, disconnect from power supply and allow cooling for at least one hour before attempting to touch heater cassette or lamps.

h) DO NOT remove safety guard whilst heater is switched on. Turn off and allow cooling (as above) before servicing.

i) DO NOT operate heater without safety guard.

j) DO NOT operate heater without lamps.

k) DO NOT look directly at illuminated lamp(s).

l) DO NOT place any object on the safety guard of the heater cassette at any time.

m) DO NOT use this heater with a thermal/programme control, timer or any other device that switches the heater on automatically as a fire risk exists if the heater is accidentally moved or covered.

n) DO NOT leave the heater unattended at any time whilst switched on.

o) DO NOT use this heater if it has been dropped.

p) DO NOT use if there are visible signs of damage to the heater.

q) Replace damaged reflectors or safety guard immediately.

r) If an extension power cord is required, use a maximum of one only, 14 Metre 3G 1.5mm2. The extension power cable must be fully unwound.

Even when used as prescribed it is not possible to eliminate all residual risk factors. Use with caution. If you are at all unsure of the correct and safe manner in which to use this appliance, do not attempt to use it.

Product Familiarisation

1. Heater Cassette
2. Safety Guard
3. Heater Body
4. Wheels
5. Control Panel
6. Handle

Intended Use

Portable thermo quartz infrared heater with 2 power settings for radiant heating, used for drying paintwork, plaster etc, and as temporary heating.

The tool must ONLY be used for its intended purpose. Any use other than those mentioned in this manual will be considered a case of misuse. The operator, and not the manufacturer, shall be liable for any damage or injury resulting from such cases of misuse. The manufacturer shall not be liable for any modifications made to the tool, nor for any damage resulting from such modifications.

Unpacking Your Appliance

- Carefully unpack and inspect your product. Fully familiarise yourself with all its features and functions.
- Ensure all parts of the product are present and in good condition.
- If any parts are missing or damaged, have such parts replaced before attempting to use this product.

Before Use

Installing the infrared halogen heater lamps

⚠ **WARNING:** DO NOT touch a lamp just after switching OFF. The temperature of a halogen lamp surface can exceed 600ºC during its operation.

IMPORTANT: Do not touch the halogen lamp quartz glass with bare hands. Quartz tube material can deteriorate by exposure to salt and lose mechanical strength. Sweat on fingers contains salt components and has an unfavourable influence on quartz tubes. Hold the tube using the protective wrapping provided in its package or with a piece of clean dry cloth. If the tube glass surface is touched, clean cold tube with alcohol and a soft cloth.

1. Ensure that the lamps are:
   - the correct voltage rating for the power input
   - a maximum of 1.1kW
2. Remove Safety Guard (2) on front of Heater Cassette (1) by loosening and removing all 5 screws and lifting guard in an upward direction.
3. Remove tube from the outer packaging, carefully leaving it in its protective wrapping. Expose the end caps of the tube and insert one end into one of the lamp holders. Push tube carefully against lamp holder until the other end of tube can be lowered into the other lamp holder.
4. Remove protective wrapping from the lamp.
5. Repeat steps 4 and 5 for the other lamp.
6. Replace Safety Guard by locating the 3 slots on the bottom of the Safety Guard and secure all 5 screws. Do not overtighten.

- Rhino recommends the use of Rhino Infrared Halogen Heater Lamps (Slim Ruby type) with this product (obtainable from Rhino or your local stockist).

Operation

⚠ **WARNING:** The minimum safe distance for the heater from any object, material or surface is 1m. This must be adhered to at all times.

⚠ **WARNING:** Do not use this heater in small rooms when they are occupied by persons not capable of leaving the room on their own, unless constant supervision is provided.

- The maximum permitted lamps are 2 x 1.1Kw
- For lamp fitting refer to 'Installing infrared halogen heater lamps'
- The heater can be operated with either one lamp or both lamps illuminated as desired, but ensure two lamps are fitted at all times

Switching ON/OFF

1. Connect the heater to the electrical supply.
2. Switch on the main switch so heater is in standby, with screen showing 'OF'.
3. Press ⏻ to turn ON the upper heating lamp. The ambient temperature is displayed on the screen (Fig. II/c).
4. Press 🔆 to turn ON/OFF the bottom heating lamp. The red sun icon will show on screen once the bottom lamp is working (Fig. II/b).
5. To power OFF the unit, press ⏻ again so the heater stops working, and goes back into standby with screen showing 'OF'. Disconnect from the electrical supply.

Setting the temperature

1. The default initial temperature setting is 30ºC.
2. Press ▲ and ▼ to set the temperature. The number flickers during setting. The setting range is 15-45ºC (Fig. II/c).
3. The upper heating lamp keeps working all the time.
4. When the ambient temperature is 4ºC lower than the set temperature, the bottom heating lamp will turn on automatically.
5. Once the ambient temperature reaches the set temperature, the bottom heating lamp will turn off again automatically.

Setting the shutdown timer

1. Press ⏱ to set the shutdown timer. Time on screen flickers with initial status 00:00 (Fig. II/a).
2. Press ▲ and ▼ to set the time to turn the heater off. It increases/decreases by 1 hour per press.
3. Press ⏱ to set the heater into countdown mode.
4. When the time is up, the heater turns off automatically and enters standby mode.

Open window detection

1. When the ambient temperature drops more than 5ºC within 10 minutes, the heater will turn off automatically and enter standby mode with three bleeps.
2. Turn the heater back on manually by pressing ⏻.

Handling

⚠ **WARNING:** Always position the heater on a firm, level and dry surface.

- During relocation, the heater should remain switched OFF and disconnected from the power supply.
- To move the heater, grip the Handle (6) firmly and gently push the heater using the Wheels (4) to roll the heater into position. If the floor surface is uneven, you may need to carry the heater using the Handle to avoid it tipping over.
- Should the heater fall over:

1. Switch OFF the heater at the ON/OFF switch.
2. Disconnect the power cord from the power supply.
3. Return the heater to a standing position.
4. Check lamps are inserted correctly into lamp holders ensuring cooling time has been adhered to. You may need to remove the Safety Guard (2) (see 'Installing the infrared halogen heater lamps').
5. If no damage has occurred to lamps or lamp holders, replace the Safety Guard if applicable, re-connect power cord to the power supply and switch the heater back ON.

Safety cut-out switch

Note: A safety cut-out switch activates at an angle of 35° (±10°), which will disable the heater. Returning the heater to an upright position will de-activate the switch.

Maintenance

⚠ **WARNING:** Ensure that the appliance is switched OFF and the plug is removed from the power point before making any adjustments or carrying out maintenance procedures.

- In case of a fault with the unit or reduced performance, turn the unit off and unplug. Repairs should be carried out by an authorised service centre.

General inspection

- Inspect the supply cord of the tool, prior to each use, for damage or wear. Repairs should be carried out by an authorised service centre. This advice also applies to extension cords used with this tool.

Cleaning

- Keep the appliance clean at all times. Dirt and dust will cause internal parts to wear quickly and shorten the device's service life. Clean the body of the appliance with a soft damp cloth. Do not get the appliance wet.
- Do not spray appliance with or immerse in water or other liquids.
- Never allow water or liquid to drip into the appliance body.
- Do not use caustic agents such as solvents or paint thinner to clean the appliance. If required, use a neutral detergent to remove dirt.
- Do not use hot water to clean any part of the appliance.

Electrical test

⚠ **WARNING:** This is a class I tested appliance.

IMPORTANT: Do not perform a flash test, as this will reduce the life of the lamps.

- When earth bond testing, the readings should be 0.10MΩ and below.

Storage

- Store this tool carefully in a secure, dry place out of the reach of children.

Contact

For technical or repair service advice, please contact:

Tradesafe Products

Helpline: 0844 800 7105

Web: www.tradesafeproducts.co.uk

Disposal

Always adhere to national regulations when disposing of electrical appliances that are no longer functional and are not viable for repair.

- Do not dispose of appliances or other waste electrical and electronic equipment (WEEE), with household waste.
- Contact your local waste disposal authority for information on the correct way to dispose of appliances.

Troubleshooting

Problem	Solution
Heater does not operate	Check power supply Check lamp(s) for damage or misalignment Check all wiring connections
Other	Consult a qualified electrician or a Rhino service agent

RHINO

Rhino designed and distributed by Tradesafe Products